AVANTI FALL PROTECTION SYSTEM

User's Manual and Installation Instructions

ANSI

User‘s Manual and Installation Instructions

All safety statements, specifications, hazards, and inspections defined shall apply only to the version of product specified in this manual. The images and representations in this manual may vary slightly from the actual product you are using; please review your product label(s) to ensure a proper match.

Date of publication:
1st Edition: May 2011
Revision 2: 18/7/11

Manufacturer:

Avanti Wind Systems A/S
Høgevej 19
3400 Hillerød
Denmark
P: (+45) 4824 9024
F: (+45) 4824 9124
E: info@avanti-online.com
I: www.avanti-online.com

ANSI

Sales & Services:

Australia	Avanti Wind Systems PTY LTD	P: +61 (0) 7 3902 1445
China	Avanti Wind Systems	P: +86 21 5785 8811
Denmark	Avanti Wind Systems A/S	P: +45 4824 9024
Germany	Avanti Wind Systems GmbH	P: +49 (0) 41 21-7 88 85 – 0
Spain	Avanti Wind Systems SL	P: +34 976 149 524
UK	Avanti Wind Systems Limited	P: +44 0 1706 356 442
USA	Avanti Wind Systems,Inc	P: +1 (262) 641-9101
India	Avanti Wind Systems,PL	P: +91 44 6455 5911

Index

1 Caution 5
2 Danger 5
3 Description of equipment. 6
3.1 Purpose 6
3.2 Function 7
3.3 Component overview. 7
4 Daily inspection 7
5 Directions for use 7
6 Maintenance 9
7 Yealy inspection 9
8 Ordering spare parts 9
9 Marking. 10

Installation manual

10 Fitting instructions 11
11 Inspection before initial use 14

Appendix A: Inspection Before Initial Use Report 15
Appendix B: Checklist /Visual test for the Runner 19
Appendix C: Registration form for the Runner 20

Limited Warranty

Avanti Wind Systems A/S warrants that commencing from the date of shipment to the Customer, and continuing for a period of the longer of 365 days thereafter, or the period set forth in the standard Avanti warranty, the Fall Protection System ("Product") described in this Manual will be free from defects in material and workmanship under normal use and service when installed and operated in accordance with the provisions of this Manual.

This warranty is made only to the original user of the Product. The sole and exclusive remedy and the entire liability of Avanti under this limited warranty, shall be, at the option of Avanti, a replacement of the Product (including incidental and freight charges paid by the Customer) with a similar new or reconditioned Product of equivalent value, or a refund of the purchase price if the Product is returned to Avanti, freight and insurance prepaid. The obligations of Avanti are expressly conditioned upon return of the Product in strict accordance with the return procedures of Avanti.

This warranty does not apply if the Product (i) has been altered without the authorization of Avanti or its authorized representative; (ii) has not been installed, operated, repaired, or maintained in accordance with this Manual or other instructions from Avanti; (iii) has been subjected to abuse, neglect, casualty, or negligence; (iv) has been furnished by Avanti to Customer without charge; or (v) has been sold on an "AS-IS" basis.

Except as specifically set forth in this Limited Warranty, ALL EXPRESS OR IMPLIED CONDITIONS, REPRESENTATIONS AND WARRANTIES, INCLUDING, BUT NOT LIMITED TO, ANY IMPLIED WARRANTY OR CONDITION OF MERCHANTABILITY, FITNESS FOR A PARTICULAR PURPOSE, NON-INFRINGEMENT, SATISFACTORY QUALITY, COURSE OF DEALING, LAW, USAGE OR TRADE PRACTICE ARE HERBY EXCLUDED TO THE MAXIMUM EXTENT PERMITTED BY APPLICABLE LAW AND ARE EXPRESSLY DISCLAIMED BY AVANTI. IF, PURSUANT TO ANY APPLICABLE LAW, TO THE EXTENT AN IMPLIED WARRANTY CANNOT BE EXCLUDED AS PROVIDED IN THIS LIMITED WARRANTY, ANY IMPLIED WARRANTY IS LIMITED IN TIME TO THE SAME DURATION AS THE EXPRESS WARRANTY PERIOD SET FORTH ABOVE. BECAUSE SOME STATES DO NOT PERMIT LIMITATIONS ON THE DURATION OF IMPLIED WARRANTIES, THIS MAY NOT APPLY TO A GIVEN CUSTOMER. THIS LIMITED WARRANTY GIVES CUSTOMER SPECIFIC LEGAL RIGHTS, AND CUSTOMER MAY HAVE OTHER LEGAL RIGHTS UNDER APPLICABLE LAWS. This disclaimer shall apply even if the express warranty fails of its essential purpose.

In any cases of dispute the English original shall be taken as authoritative.

The improved AVANTI Fall Protection System Type 2000/2002

The present AVANTI Fall Protection System is an improved edition of the Type 2000/2002.
The use and maintenance is similar for the two editions.

The modifications in the new type have however improved the safety skills of the Avanti Fall Protection System.

During tests exceeding the required program described in rfu/CNB/P/11.073, this new runner version has passed the complex Fall Back Dynamics test with lower weights than the prescribed nominal load, as it has passed with both 50kg, 70kg, 100kg and 136kg, and the side maximum distance dynamic test with both 50kg and 136kg.

Please refer to the back side of this page to see the relevant type approval certificate

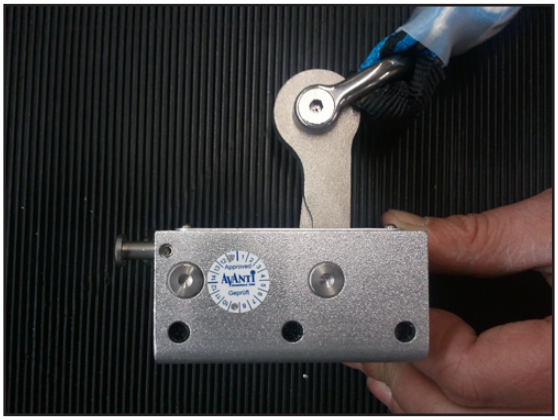

Standard model

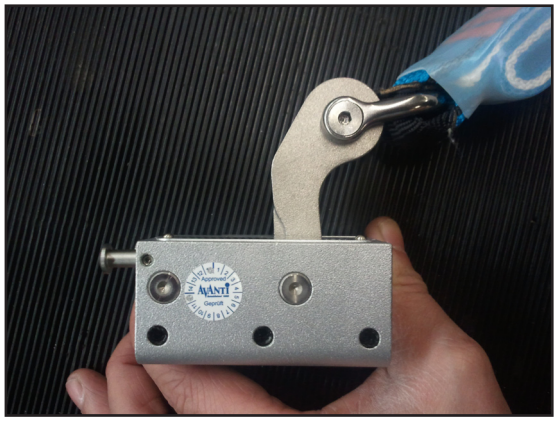

Improved model

The new version will off course fit the same rail as the previous standard model.

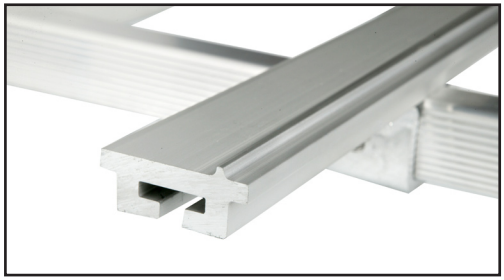

AVANTI Fall Protection Rail System

1 Caution

a) A competent person is familiar with and is trained within the AVANTI Fall Protection System, and the following standards: EN 363, EN 353-1, ANSI-ASC A14.3-2008, ANSI/ASSE Z359.1-2007, CAN/CSA Z259.12-01 and CAN/CSA Z259.2.1-98. An AVANTI Fall Protection Technician has succesfully participated in the AVANTI Fall Protection course and is considered competent. A user is familiar with the correct usage of the AVANTI Fall Protection System and has had an introduction to personal protection equipment.

b) Assembly, maintenance and testing of the Fall Protection System may only be performed by a competent person.

c) Users are obliged to read and understand this User's Manual.

d) A copy of the User's Manual must be handed out to the fall protection users and must be available for reference.

e) If more than one person is trusted with one of the above tasks, the employer shall appoint a supervisor in charge of operation.

f) If the Fall Protection System is re-sold outside the original country of destination the reseller shall provide instructions for use, for maintenance, for periodic examination and for repair in the language of the country in which the product is to be used.

g) Please insure the ladder system with the Fall protecting System is capable of supporting: for USA: not less than 5000 lb (22,6kN) static load, for Canada:not less than 27 kN / for EU: 15kN

h) Always remove the runner from the rail when not in use; the runner is not intended to be parked on the rail when freely suspended.

i) The system is only to be operated by users being proper trained in daily inspections, working at heights and practical operation of the system.

j) For optimal operation, enhanced safety and better climbing ergonomics; the climber is recommended to maintain a minimum distance of 4" (10 cm) from torso to ladder during regular climb. A good climbing position is easily obtained by leaning the upper back against the tower.

2 Danger

a) The Fall Protection System may not be used by persons under inf u-ence of alcohol or drugs that may jeopardize working safety.

b) Only people instructed to the AVANTI Fall Protection System by a qualified trainer may use the system.

c) The owner must ensure that a rescue plan that deals with any emergencies that could arise during work is in place and that the users are familiar with this.

d) If any damage or faults are found during operation, or in case of circumstances which may jeopardise safety:
- Immediately stop the work in progress
- Contact the site responsible e.g. the turbine owner or the site foreman.

e) No warranty is provided against damage resulting from reconstruction or modification of equipment or use of non-original parts which are not approved by the manufacturer.

f) The Fall Protection System may not be used outside its limitations, or for any purpose other than for which it is intended.

g) The AVANTI fall protection runner should be handed out and treated as a personal protection equipment.

h) Keep a distance of 20 feet (6 meters) between each user during ascent and descent.

i) In the first two meters the user may not be protected against hitting the ground. Take precautions.

j) Prior to initial use a competent person must inspect the system.

k) Clean off any oil, grease, or residue on the rail.

l) If oil, grease, chemicals or the like has leaked onto the shock absorber or in any kind been in contact with the webbing, have an AVANTI fall protection technician replace the shock absorber.

m) After 5 years of use replace the shock absorber. Date of manufacture is printed on the shock absorber label.

n) Operation temperature -31 Deg / 140 Fahrenheit(-35 / +60 Celcius).

o) In connection with the Fall Protection System only full body harnesses approved according to EN 361, ANSI Z359.1 and CSA Z259.10 may be used.

p) The complete Fall Protection System has been manufactured and approved according to EN 353-1, CAN/CSA Z259.2.1-98 and ANSI Z359.1.

q) Ladders supplied by AVANTI comply with the requirements of EN 131, EN ISO 14122 and ANSI 14.3

r) The Avanti supplied Carabiner is approved according to CSA , ANSI Z359.1-2007 and EN 362 requirements.

s) All parts and units have been especially developed for the AVANTI Fall Protection System Type 2002 and as such cannot be used in other Fall Protection Systems.

t) These instructions must be kept together with the Fall Protection System.

u) Whenever using the AVANTI Fall Protection System it's very important to always make sure that the harness is connected by the D-ring complying with the demands for climbing in vertical fall arrest safety systems on ladders. This infomation shall be described in the user manual from your harness supplier.

v) It's necessary to use alternative fall protection when stepping on or off the ladder. The runner must not be disconnected from the rail before establishing alternative fall protection. The runner must always be attached to the D-ring in the harness before connecting or disconnecting it to the rail.

w) When working or resting at the ladder it's essential that the user utilizes alternative safety. The AVANTI Fall Protection System is only approved as fall arrest safety when ascending or descending the ladder.

x) Don't ever twist the shock absorber, it may cause the system to fail.

The owner must verify the need for 3rd party fall protection device inspections with the local authority and comply with the standards specified.

3 Description of equipment

3.1 Purpose

The Fall Protection Devices in this User's Manual serves the following purposes:

- The Fall Protection System is intended for use during ascent and descent on stationary ladders installed in towers, pylons, well shafts, manholes, etc.
- The Fall Protection System is a safety device traveling on a rail which prevents free fall during climbing.
- The fall protection safety rail is designed for permanent installation in one place.
- The Fall Protection System can be mounted on different shapes and brands of ladders, as long as approval is issued by Avanti according to page 11, section 10d.

The Fall Protection Device is not designed for:

- Securing horizontally.
- Securing Equipment.

3.2 Function

The Fall Protection Device is comprised of a safety rail mounted on a ladder and a runner which can be clicked onto the rail. The user attaches the runner to their harness by means of an integrated shock absorber and carabiner. When starting the climb they click the runner onto the safety rail. When climbing the runner glides upward on the safety rail. In case the user experiences a fall the runner will lock onto the safety rail and arrest the fall.

3.3 Component overview:

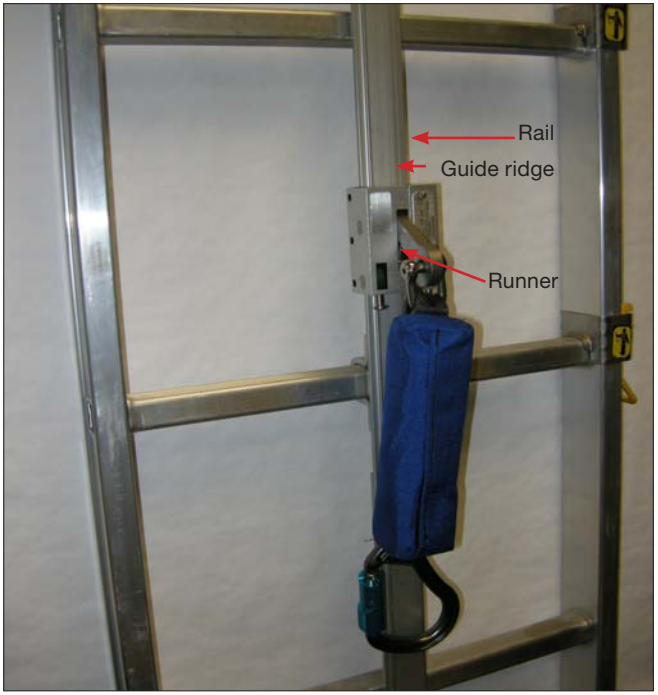

Rail and runner on ladder

Runner

4 Daily inspection

1) Before any use the runner must be checked for visual damage, wear and tear, and other defects, according to appendix B.
2) During ascent look for visible damage and loose parts along with loose bolts on ladder, rail or joints.

3) Equipment with defects or equipment that leaves doubt concerning safe use must be checked by a competent person.

STOP if the runner looks defective / or parts are missing, do not use it.

5 Directions for use

DANGER!

- The runner, the shock absorber, and the carabiner comprise a safety system. Never adapt, extend, or in any way change this system.
- The runner may only be used if the bottom left steel tap lock has popped out in lock position.
- The arrow on the runner must point upward – otherwise it will not block a fall.

Correct mounting

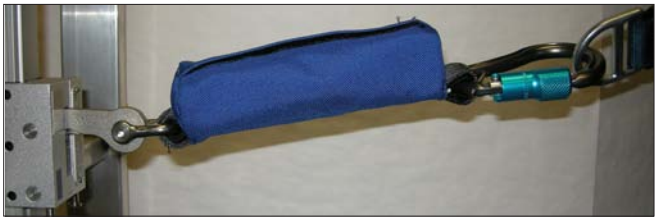

Instructions:

a) Before using this Fall Protection System make sure to wear an approved harness worn in accordance to the manufacturer's instructions.

b) Fasten the runner carabiner to the D-ring of the full body harness. Remember to choose connection in the chest D-ring for fall arrest according to the description in the user manual of the harness. When runner is mounted, it's important that the shock absorber isn't twisted – it shall be mounted straight between the runner and the carabiner.

Always make sure that the runner is connected to the D-ring of the full body harness when attaching/detaching the runner.

c) With the arrow on the plate pointing upwards the runner is clicked onto the safety rail. (see picture 1)

Open runner by pushing bottom left steel tap lock and pull left and right runner side apart.
Place one of the runner sides on its respective safety rail side with the runner arrow pointing upward (1).

1

2

While lifting the break leaver, tilt the runner so both runner sides are around each side of the safety rail (2).

3

Push the two runner body parts together until the bottom left steel tap lock pops back in position and locks the runner body. Make sure it is locked correctly (3).

Detach runner by pushing the bottom left steel tap and pull the runner sides apart.

Before detaching assure you are in a safe area or secured by another fall protection device.

DANGER!

- If the fall protection device has blocked a fall take the ladder and runner out of use. Contact a Fall Protection Technician so they can inspect the affected ladder/rail and the runner.

- When ever using the AVANTI Fall Protection System it's very important to always make sure, that the harness is connected by the D-ring complying with the demands for climbing vertical fall arrest safety systems on lad ders. This information shall be described in the user manual from your harness supplier.

- To ensure safety it's very important that the runner is attached to the correct D-ring of the harness before connecting to or disconnecting from the the ladder/fall arrest system. This way the user can't drop the runner. Only connect or disconnect the runner from the rail while standing on a safe support or adequately tied-off with secondary fall protection system.

- When working or resting at the ladder it's essential that the user uses a secondary fall protection system. The AVANTI Fall Protection System is only approved as fall arrest safety when ascending or descending the ladder.

6 Maintenance

a) Keep all parts free of oil, grease, paint and chemicals.

b) Never place liquids or sharp objects in the vicinity of the Fall Protection System as these may damage the equipment.

c) The shock absorber pack can be cleaned using a weak detergent-solution and a soft brush. Subsequently, rinse with lots of clean water.

d) If the system gets wet let the shock pack air-dry naturally. Do not use any kind of heating.

e) Store runner out of direct sunlight and protected form heat and dust.

At least every 12 months an inspection by an AVANTI fall protection expert shall be carried out.

7 Yearly inspection

Once a year a competent person must inspect the fall protection system according to ANSI Z359.2-2007. If the yearly tests are not performed this will void the warranty and Avanti will renounce all liability and claims that may appear. AVANTI conducts Fall Protection Courses on a regular basis. If interested, contact Avanti.

8 Ordering spare parts

When parts are found to be missing, stop working - the system must be taken out of use!
Rail and ladder: Contact a competent person and let him/her replace/repair the missing parts and conduct a Fall Protection System inspection.
Runner: Contact Avanti and let them replace/repair the missing parts and conduct a runner inspection.

9 Marking

Upward direction when runner is attached to rail
Read instructions before use
Runner production no.
Compliance
AVANTI product name
Standard no.

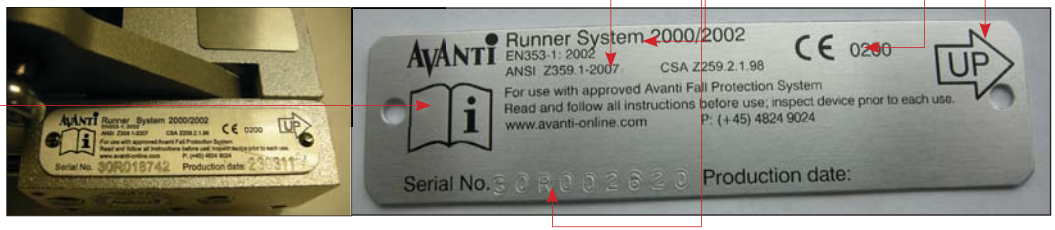

Runner rating plate

EEC-notified body no.
Standard no.
Production batch no.
Read instructions before use

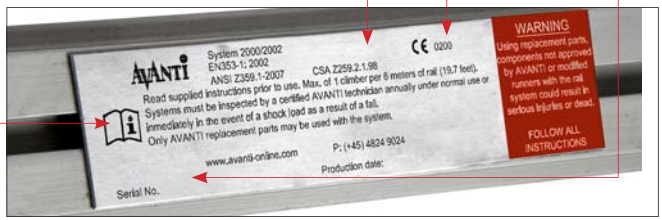

Rail rating plate

Shock pack label

10 Fitting instructions

a) An competent person must be in charge of the Fall Protection System installation. The competent person takes full responsibility for the installation and guarantee that the installation is done in accordance with these instructions.

b) Prior to mounting the system, ensure that the ladder involved will be able to carry the load.
Please refer to manufacturer's documentation to check that the system fulfils mandatory standards

c) Ensure that the ladder intended for mounting the AVANTI Fall Protection System comply with the requirements of EN 131, EN ISO 14122 and ANSI 14.3. E.g. internal rung width must be minimum 340mm (All AVANTI ladders are compliant)

d) Ladder with rung geometries that differs form AVANTI's may call for special rung fittings.
These must be calculated and approved by AVANTI.

e) Before installing the fall protection rail ensure that all parts are present. Refer to parts list delivered along with the Fall Protection System.

Installing the AVANTI Fall Protection System you will need the following parts.

Rung fitting

Rung fitting mounted on a Safety rail.

Hammerhead bolt with self-locking nut

Fish joint connector

Stopper

Runner

Mounting of rail on ladder:

1. Place the safety rail in the center of the ladder with **the guide ridge situated in the left side**.

2. Mount the fall protection rung fittings with hammerhead bolts as follows:

   a) At the bottom or second last rung of the safety rail ladder.

   b) At min. every 3rd rung never allowing more than 2 rungs in a row without rung fitting.

   c) At the top rung of the safety rail ladder.

3. When joining more ladder sections use fish joint connector. Assure that 2 hammerhead bolts are used for each rail end - that is 4 per fish joint. Min. distance between rail ends is **0.5 - 4mm**. (see picture of Fish joint connector at page 11, section 10).

4. The indicator mark on the hammerhead bolt must be positioned at an angle of 70° to the safety rail. (see fig below)

5. Tighten the hammerhead nut with 8 Nm.

6. Self-locking nuts must be used at all times, ensure that:
   - The bolt extends from the nut by at least half of the thread diameter.
   - If it has become possible to loosen the nut by hand replace the nut.

7. At the top and buttom of the safety rail mount a stopper.

8. During installation in wind turbine towers mount a temporary stopper on the rail top of each individual tower section, then technicians can use the Fall Protection System when erecting (connecting tower sections) the tower. These temporary stoppers should be removed when the fall protection rail is joined to the next tower section.

Connection of ladder and rail in tower flange connections.

In case the rail and ladder is installed in a wind turbine tower before the tower is assembled the ladder and rail may need adjustment during tower assembly. Please follow the cutting and fitting instructions below.

Ladder Top:

A rung fitting is always mounted on the top rung of each tower section.

1. After cutting-off the safety rail above the rung, the safety rail must extend minimum 55mm **above** the rung (see Fig. A below).

2. If the rail is cut to less than 100 mm **above** the step (x<100 mm) the fitting must be moved down one step (See fig. B below).

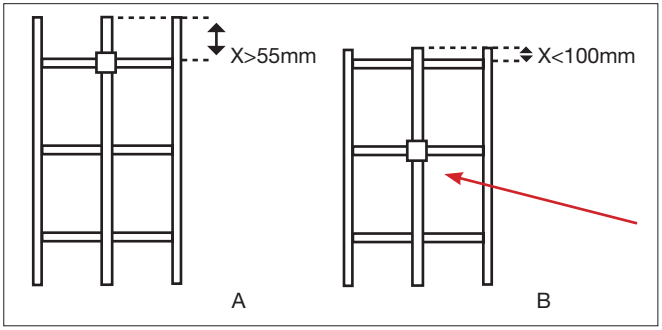

Ladder Bottom:

3. After cutting-of the safety rail **below** the rung, the safety rail must extend minimum 55mm below the rung.

4. If the rail is cut to less than 100 mm **below** the rung (x<100 mm), the rung fitting - if any, must be moved up one rung (See fig. D below).

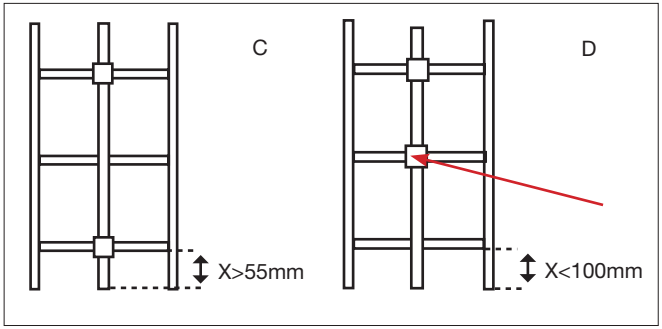

5. If it is not a bottom tower section there must always be a rung fitting on one of the two lower rungs. If this is not the case this must be retro fitted.

General mounting instructions:

- The Avanti Fall protection System shall only be installed with original system parts.
- All system elements must be checked on site, even if the ladders are supplied with the rails already mounted.
- The ladder joints are to absorb the vibrations and torsional stress. Not the safety rail.
- Top end of the rail is allowed to pass the ladder rung with 100 mm.
- Any cutting of the rail has to be done with 90° accuracy across and through the rail.
- Connecting rail assamblies need to have a min. gap of 0.5 mm and max. 4mm.
- Never use a metal hammer on the rail, this will damage the rails coating and guide ridge.

11 Inspection before initial use

Before first use an competent person must inspect the Fall Protection System. The result of the inspection must be entered in the enclosed Inspection before initial use report in appendix A and filed for later reference.

Ladder rung:

- Ensure that no dents, holes, or cracks have any influence on the step stability.
- Dents may not exceed 10 mm in diameter or be more than 1 mm deep.
- If dents are found on the rung edges or corners the step stability can no longer be guaranteed. Replace step.

Ladder stile

- Ensure that no dents, holes, or cracks have any inf uence on the stile stability.
- Dents may not exceed 20mm in diameter or be more than 1 mm deep.
- If dents are found on the stile edges or corners the stile stability can no longer be guaranteed. Replace the ladder section.

Ladder connections

- Maximum deviation on rung distance at flange connection is 30mm.

Ladder end

- At the top end and bottom end of the ladder a protection guard such as the AVANTI rubber feet or end cap must be in place. During construction of wind turbine towers a temporary top stopper must be mounted on the fall protection rail at each individual tower section.

Safety rail

- Ensure that the safety rail fittings are mounted according to the mounting section in this manual.
- Ensure that no sharp rail ends are present.
- Check the legibility of the product marking. If marking is not present have Avanti replace them.
- Ensure that top and bottom stoppers are mounted.

Safety rail connections

- Ensure that fish joint connectors are mounted using 4 hammerhead bolts, 2 on each safety rail section leaving a gap of min. **0.5 - 4 mm** between each safety rail, and that the indicator mark on the hammerhead bolt is turned 70°
- Make sure all hammerhead bolts and self locking nuts present on the system are torqued with 8 NM.

TEST FORM:

AVANTI FALLPROTECTION TYPE 2000/2002 EN 353-1 CE:DK-0200-C.894 EN 353-1 CE:DK-0200-C.1165 ANSI Z359.1-2007	User's Name: Phone: Name of inspector: Date of inspection:
Tower (WEA-No.):	

Ladder inspection		OK	not OK
Rung:	No dents, holes, or cracks inf uence on rung stability	☐	☐
	No dents larger than 10 mm in diameter or 1 mm deep	☐	☐
	No dents on rung corners	☐	☐
	Other damage: _____		
Stile:	No dents, holes, or cracks inf uence on stile stability	☐	☐
	No dents on style larger than 20 mm in diameter or 1 mm deep	☐	☐
	No dents on stile corners	☐	☐
	Other damage: _____		
Ladder connections:	Distance between ladder ends less than 30 mm	☐	☐
Ladder ends:	AVANTI rubber feet or end cap mounted	☐	☐
General:	Free of dirt (oil, corrosion etc.) on ladder	☐	☐
Rail			
Rung fitting:	At 1st or 2nd rung at the **beginning** of each ladder section	☐	☐
	At 1st or 2nd rung at the **end** of each ladder section	☐	☐
	At min. Every 3rd rung	☐	☐
	Min. 2 fittings for each shortened rail	☐	☐
	Other damage: _____		
Rail connections (Fish joint):	Fish joint connector fastened with 2 hammerhead bolts on each rail	☐	☐
	All hammerhead bolt indication marks in an angle of 70° to the rail	☐	☐
	Min 1mm, max 4 mmdistance between rail ends	☐	☐
	Other damage: _____		
Rail:	No sharp edges	☐	☐
	Mounted in accordance to the installation instructions	☐	☐
	Rail mounted with guide ridge on left side (see 3.3)	☐	☐
General:	Free of dirt (oil, corrosion etc.) on rail	☐	☐
	Other damage: _____		
General			
	Resting platform in place and fixed	☐	☐
	All hardware in place and torqued	☐	☐
	Labels and markings legible	☐	☐
	Other damage: _____		

Is the Ladder safe for use: ☐ **YES** ☐ **NO** **Is the Rail safe for use:** ☐ **YES** ☐ **NO**

If Rail use is prohibited mark " Is the Rail safe for use" as NO. In this case the Ladder must not be used either. Mark "Is the Ladder safe for use" as NO.

These inspections may only be performed by AVANTI or by a competent person. At least every12 months an inspection by an AVANTI fall protection technician or competent person shall be carried out. The inspection results must be entered in a test journal and filed for later reference.	Inspector's Signature

TEST FORM:

AVANTI FALLPROTECTION TYPE 2000/2002 EN 353-1 CE:DK-0200-C.894 EN 353-1 CE:DK-0200-C.1165 ANSI Z359.1-2007	User's Name: Phone: Name of inspector: Date of inspection:
Tower (WEA-No.):	

Ladder inspection		OK	not OK
Rung:	No dents, holes, or cracks inf uence on rung stability	☐	☐
	No dents larger than 10 mm in diameter or 1 mm deep	☐	☐
	No dents on rung corners	☐	☐
	Other damage: _____		
Stile:	No dents, holes, or cracks inf uence on stile stability	☐	☐
	No dents on style larger than 20 mm in diameter or 1 mm deep	☐	☐
	No dents on stile corners	☐	☐
	Other damage: _____		
Ladder connections:	Distance between ladder ends less than 30 mm	☐	☐
Ladder ends:	AVANTI rubber feet or end cap mounted	☐	☐
General:	Free of dirt (oil, corrosion etc.) on ladder	☐	☐
Rail			
Rung fitting:	At 1st or 2nd rung at the **beginning** of each ladder section	☐	☐
	At 1st or 2nd rung at the **end** of each ladder section	☐	☐
	At min. Every 3rd rung	☐	☐
	Min. 2 fittings for each shortened rail	☐	☐
	Other damage: _____		
Rail connections (Fish joint):	Fish joint connector fastened with 2 hammerhead bolts on each rail	☐	☐
	All hammerhead bolt indication marks in an angle of 70° to the rail	☐	☐
	Min 1mm, max 4 mmdistance between rail ends	☐	☐
	Other damage: _____		
Rail:	No sharp edges	☐	☐
	Mounted in accordance to the installation instructions	☐	☐
	Rail mounted with guide ridge on left side (see 3.3)	☐	☐
General:	Free of dirt (oil, corrosion etc.) on rail	☐	☐
	Other damage: _____		
General			
	Resting platform in place and fixed	☐	☐
	All hardware in place and torqued	☐	☐
	Labels and markings legible	☐	☐
	Other damage: _____		

Is the Ladder safe for use: ☐ **YES** ☐ **NO** **Is the Rail safe for use:** ☐ **YES** ☐ **NO**

If Rail use is prohibited mark " Is the Rail safe for use" as NO. In this case the Ladder must not be used either. Mark "Is the Ladder safe for use" as NO.

These inspections may only be performed by AVANTI or by a competent person. At least every12 months an inspection by an AVANTI fall protection technician or competent person shall be carried out. The inspection results must be entered in a test journal and filed for later reference.	Inspector's Signature

TEST FORM:

AVANTI FALLPROTECTION TYPE 2000/2002 EN 353-1 CE:DK-0200-C.894 EN 353-1 CE:DK-0200-C.1165 ANSI Z359.1-2007	User's Name: Phone: Name of inspector: Date of inspection:
Tower (WEA-No.):	

Ladder inspection		OK	not OK
Rung:	No dents, holes, or cracks inf uence on rung stability	☐	☐
	No dents larger than 10 mm in diameter or 1 mm deep	☐	☐
	No dents on rung corners	☐	☐
	Other damage: _____		
Stile:	No dents, holes, or cracks inf uence on stile stability	☐	☐
	No dents on style larger than 20 mm in diameter or 1 mm deep	☐	☐
	No dents on stile corners	☐	☐
	Other damage: _____		
Ladder connections:	Distance between ladder ends less than 30 mm	☐	☐
Ladder ends:	AVANTI rubber feet or end cap mounted	☐	☐
General:	Free of dirt (oil, corrosion etc.) on ladder	☐	☐
Rail			
Rung fitting:	At 1st or 2nd rung at the **beginning** of each ladder section	☐	☐
	At 1st or 2nd rung at the **end** of each ladder section	☐	☐
	At min. Every 3rd rung	☐	☐
	Min. 2 fittings for each shortened rail	☐	☐
	Other damage: _____		
Rail connections (Fish joint):	Fish joint connector fastened with 2 hammerhead bolts on each rail	☐	☐
	All hammerhead bolt indication marks in an angle of 70° to the rail	☐	☐
	Min 1mm, max 4 mmdistance between rail ends	☐	☐
	Other damage: _____		
Rail:	No sharp edges	☐	☐
	Mounted in accordance to the installation instructions	☐	☐
	Rail mounted with guide ridge on left side (see 3.3)	☐	☐
General:	Free of dirt (oil, corrosion etc.) on rail	☐	☐
	Other damage: _____		
General			
	Resting platform in place and fixed	☐	☐
	All hardware in place and torqued	☐	☐
	Labels and markings legible	☐	☐
	Other damage: _____		

Is the Ladder safe for use: ☐ **YES** ☐ **NO** **Is the Rail safe for use:** ☐ **YES** ☐ **NO**

If Rail use is prohibited mark " Is the Rail safe for use" as NO. In this case the Ladder must not be used either. Mark "Is the Ladder safe for use" as NO.

These inspections may only be performed by AVANTI or by a competent person. At least every12 months an inspection by an AVANTI fall protection technician or competent person shall be carried out. The inspection results must be entered in a test journal and filed for later reference.	Inspector's Signature

TEST FORM:

AVANTI FALLPROTECTION TYPE 2000/2002 EN 353-1 CE:DK-0200-C.894 EN 353-1 CE:DK-0200-C.1165 ANSI Z359.1-2007	User's Name: Phone: Name of inspector: Date of inspection:
Tower (WEA-No.):	

Ladder inspection		OK	not OK
Rung:	No dents, holes, or cracks inf uence on rung stability	☐	☐
	No dents larger than 10 mm in diameter or 1 mm deep	☐	☐
	No dents on rung corners	☐	☐
	Other damage: _____		
Stile:	No dents, holes, or cracks inf uence on stile stability	☐	☐
	No dents on style larger than 20 mm in diameter or 1 mm deep	☐	☐
	No dents on stile corners	☐	☐
	Other damage: _____		
Ladder connections:	Distance between ladder ends less than 30 mm	☐	☐
Ladder ends:	AVANTI rubber feet or end cap mounted	☐	☐
General:	Free of dirt (oil, corrosion etc.) on ladder	☐	☐
Rail			
Rung fitting:	At 1st or 2nd rung at the **beginning** of each ladder section	☐	☐
	At 1st or 2nd rung at the **end** of each ladder section	☐	☐
	At min. Every 3rd rung	☐	☐
	Min. 2 fittings for each shortened rail	☐	☐
	Other damage: _____		
Rail connections (Fish joint):	Fish joint connector fastened with 2 hammerhead bolts on each rail	☐	☐
	All hammerhead bolt indication marks in an angle of 70° to the rail	☐	☐
	Min 1mm, max 4 mmdistance between rail ends	☐	☐
	Other damage: _____		
Rail:	No sharp edges	☐	☐
	Mounted in accordance to the installation instructions	☐	☐
	Rail mounted with guide ridge on left side (see 3.3)	☐	☐
General:	Free of dirt (oil, corrosion etc.) on rail	☐	☐
	Other damage: _____		
General			
	Resting platform in place and fixed	☐	☐
	All hardware in place and torqued	☐	☐
	Labels and markings legible	☐	☐
	Other damage: _____		

Is the Ladder safe for use: ☐ **YES** ☐ **NO** **Is the Rail safe for use:** ☐ **YES** ☐ **NO**

If Rail use is prohibited mark " Is the Rail safe for use" as NO. In this case the Ladder must not be used either. Mark "Is the Ladder safe for use" as NO.

These inspections may only be performed by AVANTI or by a competent person. At least every12 months an inspection by an AVANTI fall protection technician or competent person shall be carried out. The inspection results must be entered in a test journal and filed for later reference.	Inspector's Signature

Appendix B: Checklist /Visual test for the Runner

	ISSUE DESCRIPTION	PASS	FAIL	VISUAL TEST
1	Is the runner's body free from corrosion, deformation and other damage?			
	COMMENTS			
2	Is the break lever free from corrosion, deformation and other damage?			
	COMMENTS			
3	Are the 4 rivets securely attached to the middle plate? Is the middle plate free of damage or bending?			
	COMMENTS			
4	Are the 2 rivets attached securely to the aluminum serial plate?			
	COMMENTS			
5	Are the synthetic guides in place and free from bruises and marks? Is the blank aluminum plate present and sitting tight?			
	COMMENTS			
6	Is the shock absorber pack in normal shape and free from cuts, burns, seams visible signs of wear?			
	COMMENTS			

	ISSUE DESCRIPTION	PASS	FAIL	VISUAL TEST
7	Is the Carabiner and shackle free from marks, deformities, wear or traces of corrosion?			
	COMMENTS			
8	Is the locking mechanism of the Carabiner functioning good? Is the return spring and articulation of the gate working properly?			
	COMMENTS			
9	Is the shock absorber's black strap completely covered in the locking pin?			
	COMMENTS			
10	Is the runner easy to close and open? Does it has a frictionless operation?			
	COMMENTS			
11	Does the break lever move smoothly up and down? Are both the spring and shackle securely attached?			
	COMMENTS			
12	Is the runner sliding smoothly on the rail?			
	COMMENTS			

Appendix C: Registration form for the Runner

Avanti Runner	Installation address:	Avanti Wind Systems A/S · DK-3400 Hillerød Tel:+45 48 24 90 24 · Fax: +45 48 24 91 24

Date of purchase:	Date first put into service:

Periodic examination and repair history

Date	Identification no.:	Reason for entry (per. examination)	OK / not OK	Inspector	Periodic examination next due date

Australia
Avanti Wind Systems PTY LTD
Unit 15 / 160 Lytton Road
Morningside 4170 · Queensland
P: +61 (0) 7 3902 1445 · F: +61 (0)7 3902 1252

China
Avanti Wind Systems
Building 14 · Weishi Industrial Park
No. 599 Zhongxin Road · Dagang Town
Songjiang District · 201614 Shanghai
P: +86 21 5785 8811 · F: +86 21 5785 8815

Denmark
Avanti Wind Systems A/S
Høgevej 17-19 · 3400 Hillerød · Denmark
P: +45 4824 9024 · F: +45 4824 9124

Germany
Avanti Wind Systems GmbH
Max-Planck-Str. 10 25335 Elmshorn
P: +49 (0) 41 21-7 88 85 – 0 · F: +49 (0) 41 21- 7 88 85-20

Spain
Avanti Wind Systems SL · Poligono Industrial Centrovia
Calle Los Angeles No 88 nave 1 · 50198 La Muela
P: +34 976 149524 · F: +34 976 149508

UK
Avanti Wind Systems Limited
Caldershaw Business Centre · Unit 29
Ings Lane · Rochdale · OL12 7LQ
P: +44 0 1706 356 442

USA
Avanti Wind Systems, Inc.
5150 S. Towne Drive · New Berlin · Wisconsin 53151
P: +1 (262) 641-9101 · F: +1 (262) 641-9161

India
Avanti Wind Systems India Private Ltd
Indus Valley's Logistic Park · Unit 3 · Warehouse No. G-2
Ground Floor · Vellala Street · Mel Aiyanambakkam
Chennai 600095 · Tamil Nadu
P: +91 44 6455 5911

I: www.avanti-online.com · E: info@avanti-online.com

47840015 - Manual Fall Protect.(US) EN/ES
1st Edition: May 2011
Revision 2: 18/7/11